Please read and save these instructions. Read through this owner's manual carefully before using product. Protect yourself and others by observing all safety information, warnings, and cautions. Failure to comply with instructions could result in personal injury and/or damage to product or property. Please retain instructions for future reference.

HFO-1234YF MANIFOLD GAUGE SET

FOR CUSTOMER SERVICE

Technical Question?

CALL 1-866-458-2472

customerservice@oem-tools.com

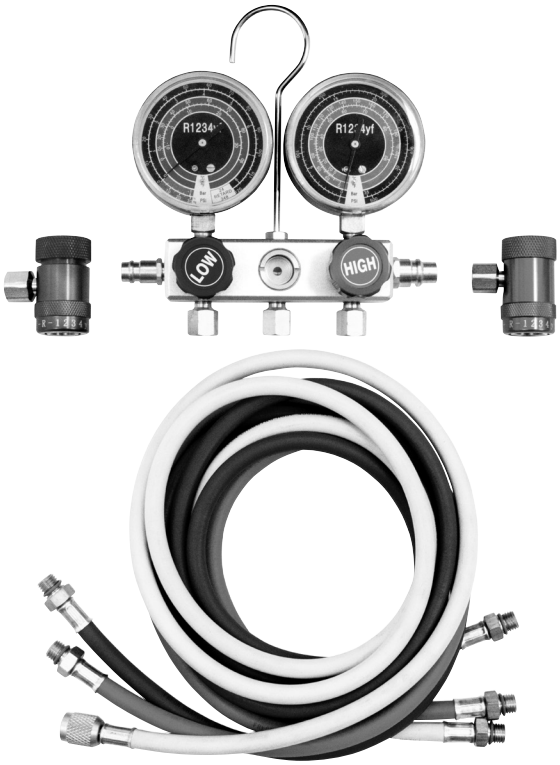

UNPACKING

After unpacking unit, inspect carefully for any damage that may have occurred during transit. Check for loose, missing, or damaged parts. If any damage is observed, a shipping damage claim must be filed with carrier. Do not use the OEMTOOLS® HFO-1234YF Manifold Gauge Set if broken, bent, cracked or damaged parts (including labels) are noted. Any HFO-1234YF Manifold Gauge Set that appears damaged in any way, operates abnormally or is missing parts should be removed from service immediately. If you suspect that the HFO-1234YF Manifold Gauge Set was subjected to shock load (a load that was dropped suddenly, unexpectedly, etc.) immediately discontinue use until it has been checked by a factory authorized service center.

⚠ WARNING

The following safety information is provided as a guideline to help you operate your HFO-1234YF Manifold Gauge Set under the safest possible conditions. Any tool or piece of equipment can be potentially dangerous to use when safety or safe handling instructions are not known or not followed. The following safety instructions are to provide the user with the information necessary for safe use and operation. Please read and retain these instructions for the continued safe use of your service system. Failure to follow instructions listed below may result in serious injury. In addition, make certain that anyone that uses the equipment understands and follows these safety instructions as well.

Explanation of Safety Signal Words

⚠ **WARNING**: Indicates a potentially hazardous situation which, if not avoided, could result in death or serious injury.

⚠ **CAUTION**: Indicates a potentially hazardous situation which, if not avoided, may result in minor or moderate injury.

CAUTION: Used without the safety alert symbol indicates a potentially hazardous situation which, if not avoided, may result in property damage.

NOTES: Provide clarity and helpful information.

Thank you very much for choosing an OEMTOOLS Product!

For future reference, please complete the owner's record below:

Model: _____ Purchase Date: _____

Save the receipt, warranty and these instructions. It is important that you read the entire manual to become familiar with this product before you begin using it. This machine is designed for certain applications only. OEMTOOLS cannot be responsible for issues arising from modification. We strongly recommend this machine is not modified and/or used for any application other than that for which it was designed. If you have any questions relative to a particular application, DO NOT use the machine until you have first contacted OEMTOOLS to determine if it can or should be performed on the product.

For technical questions please call 1-866-458-2472.

2015 ©OEMTOOLS

HFO-1234YF MANIFOLD GAUGE SET

IMPORTANT INSTRUCTIONS AND SAFETY RULES

1. Know your tool. Read this manual carefully. Learn the tool's applications and limitations, as well as, potential hazards specific to it.
2. Keep work area clean and well lit. Cluttered or dark work areas invite accidents.
3. Keep children away. All children should be kept away from the work area. Never let a child handle a tool without strict adult supervision.
4. Do not operate this tool if under the influence of alcohol or drugs. Read warning labels on prescriptions to determine if your judgment or reflexes are impaired while taking drugs. If there is any doubt, do not attempt to operate.
5. Use safety equipment. Eye protection should be worn at all times when operating this tool. Use ANSI approved safety glasses. Everyday eyeglasses are NOT safety glasses. Dust mask, non-skid safety shoes, hard hat or hearing protection should be used in appropriate conditions.
6. Wear proper apparel. Loose clothing, gloves, neck-ties, rings, bracelets or other jewelry may present a potential hazard when operating this tool. Keep all apparel clear of the tool.
7. Don't overreach. Keep proper footing and balance at all times when operating this tool.
8. Check for damage. Check your tool regularly. If part of the tool is damaged it should be carefully inspected to make sure that it can perform its intended function correctly. If in doubt, the part should be repaired. Refer all servicing to a qualified technician. Consult your dealer for advice.
9. Store idle tools out of the reach of children and untrained persons. Tools may be dangerous in the hands of untrained users.

- Maintain tools with care.
- Keep tools dry and clean.
- Do not use a damaged tool. Tag damaged tools "Do not use" until repaired.
- Use only accessories that are recommended by the manufacturer for your model. Accessories that may be suitable for one tool may become hazardous when used on another tool.
- Tool service must be performed only by qualified repair personnel. Service or maintenance performed by unqualified personnel could result in a risk of injury.
- When servicing a tool, use only identical replacement parts. Use of unauthorized parts or failure to follow maintenance instructions may create a risk of injury.
- Maintain a safe working environment. Keep the work area well lit. Make sure there is adequate surrounding workspace. Keep the work area free of obstructions, grease, oil, trash, and other debris. Do not use this product in a damp or wet location.
- Maintain labels and nameplates on this product. These carry important information. If unreadable or missing, contact OEMTOOLS for a replacement.
- Before use, read and understand all warnings, safety precautions, and instructions as outlined in the vehicle manufacturer's service manual. It is beyond the scope of this manual to properly describe the correct procedure and test data for each vehicle.
- Always perform vehicle service in a properly ventilated area. Never run an engine without proper ventilation for its exhaust. Stop work and take necessary steps to improve ventilation in the work area if you develop momentary eye, nose, or throat irritation as this indicates inadequate ventilation.

WARNING

- Engine parts that are in motion and unexpected movement of a vehicle can injure or kill. When working near moving engine parts, wear snug fit clothing and keep hands and fingers away from moving parts. Keep hoses and tools clear of moving parts. Always stay clear of moving engine parts. Hoses and tools can be thrown through the air if not kept clear of moving engine parts. The unexpected movement of a vehicle can injure or kill. When working on vehicles always set the parking brake or block the wheels.
- Avoid accidental fire and/or explosion. Do not smoke near engine fuel and battery components.
- The warnings, precautions, and instructions discussed in this manual cannot cover all possible conditions and situations that may occur. The operator must understand that common sense and caution are factors which cannot be built into this product, but must be supplied by the operator.
- For safety purposes and the prevention of damage to expensive components it is advised that the user have an understanding of basic automotive repair and a working knowledge of automotive systems.
- We believe the information contained herein to be reliable. However, general technical information is given by us without charge and the user shall employ such information at his own discretion and risk. We assume no responsibility for results or damages incurred from the use of such information in whole or in part. Always refer to specific instructions and technical information supplied by vehicle manufacturer.

NOTE: The manufacturer declines any and all responsibility for damage to vehicles or components if said damage is the result of unskillful handling by the operator or of failure to observe the basic safety rules set forth in the instruction manual.

WARNING

Read Rules for Safe Operation and Instructions Carefully

DISPOSAL

At the end of the useful life of the Digital Refrigerant Scale, dispose of the components according to all state, federal, and local regulations

All technicians opening the refrigeration circuit in automotive air conditioning systems must now be certified in refrigerant recovery and recycling procedures to be in compliance with Section 609 of the Clean Air Act Amendments of 1990. For information on certification call MACS Worldwide at (215) 631-7020.

2015 ©OEMTOOLS

HFO-1234YF MANIFOLD GAUGE SET

PURPOSE

This HFO-1234YF Manifold Gauge Set is designed to test automotive air conditioning systems (using HFO-1234YF refrigerant only) by comparing the “high side” and “low side” pressure reading to the vehicle manufacturer’s A/C system specifications.

This HFO-1234YF Manifold Gauge Set can be used to test, evacuate and fill automotive air conditioning systems that come equipped with HFO-1234YF Refrigerant.

PRODUCT SPECIFICATIONS

Blue Gauge (Low)	3" - 30" Hg - 120 psi
Red Gauge (High)	3" - 0-500 psi
Blue Hose	72” 4000 psi Burst – 800 psi Working Pressure
Red Hose	72” 4000 psi Burst – 800 psi Working Pressure
Yellow Hose	72” 4000 psi Burst – 800 psi Working Pressure
Red Coupler	6 Ball Anodized HFO-1234YF
Blue Coupler	6 Ball Anodized HFO-1234YF
Compatible With	HFO-1234YF

The 1990 amendments to the United States Clean Air Act mandate that all personnel who service refrigerant systems must be trained and certified. Fines are in place for violations and compliance is now being monitored by the U.S. EPA.

Do Not Vent Refrigerant to the Atmosphere. Use Appropriate Recovery Equipment.

⚠ CAUTIONS

These instructions are not for use with Hybrid Vehicles. For instructions for servicing Hybrid Vehicles use Hybrid Vehicle manufacturer’s service manual only. Confirm system refrigerant type before servicing vehicle. Cross contamination of refrigerants can cause damage to A/C system, service tools and equipment. Do not blend refrigerants in a system or in the same container.

PRE-SERVICE INSTRUCTIONS

1. Close both valves on the Manifold Gauge set by turning the High and Low Knobs clockwise.
2. Attach the High and Low Couplers to the male end of the Red and Blue Hoses. Open and close the plunger by turning the knob prior to connection to the system. Make sure plungers are retracted (turn knob counter-clockwise) before connecting to vehicle.
3. Connect the Red Hose to the High Port and the Blue Hose to the Low Port on the Manifold Gauge.

TESTING AND CHARGING

To properly diagnose the problem in the A/C system, first check the system’s overall performance. This includes testing the system’s pressure and refrigerant flow. These conditions can be checked with the manifold gauge set.

NOTE: Be sure that the hand valves on the manifold gauge set are in the closed position. Always wear gloves and safety goggles when working with refrigerant.

1. Remove the protective caps from the system ports. Check for leaks at the ports.
2. Connect the Low Side Service Hose (Blue) to the suction side of the compressor. Connect the High Side Service Hose (Red) to the discharge side of the compressor. Make sure the Couplers are securely connected to system.
3. Move the plunger down within the Coupler by turning the knurled Knob clockwise in order to open the port valves and start refrigerant flow.
4. Start the vehicle, then turn on the A/C system, and let it run until the gauge readings stabilize.
5. If the gauge readings are within the manufacturer’s specification, and the A/C system appears to be operating properly, stop the A/C system, turn off the vehicle, close all valves on the Manifold and Couplers and disconnect the Hoses from the system.
6. If the pressures shown on the gauges differ from the manufacturer’s specifications, determine the problem and make the necessary repairs.

IMPORTANT NOTES:

- A system that has been opened or one that is found to be excessively low on refrigerant pressure as a result of a leak must be fully evacuated by means of recycling and deep vacuum.
- A system that has been evacuated must be repaired, leak tested and evacuated again to 29” Hg. before charging.
- After charging, test the system by turning on the engine and running the A/C with both valves closed on the manifold.

MAINTENANCE

1. Always store the HFO-1234YF Manifold Gauge Set in a well-protected area where it will not be exposed to inclement weather, corrosive vapors, abrasive dust, or any other harmful elements.
2. Keep the HFO-1234YF Manifold Gauge Set clean for better and safer performance.

2015 ©OEMTOOLS

HFO-1234YF MANIFOLD GAUGE SET

Figure	Description	Quantity
A	High Side Gauge (Red) Complete	1
B	Low Side Gauge (Blue) Complete	1
C	Lens	2
D	O-ring for Male Hose Fitting (Not Shown)	5
E	Gasket for Hose Assembly	1
F	Manual High Side Coupler (Red) Complete	1
G	Manual Low Side Coupler (Blue) Complete	1
H	High Side Coupler O-Ring (Not Shown)	1
I	Low Side Coupler O-Ring (Not Shown)	1
J	Knob only, Low Side	1
K	Knob only, High Side	1
L	Complete Stem Assembly with Knob (Not Shown)	2
M	Stem O-ring (Not Shown)	2
N	Piston Seal Assembly W/O-rings (Not Shown)	2
O	Red Hose	1
P	Blue Hose	1
Q	Yellow Hose	1

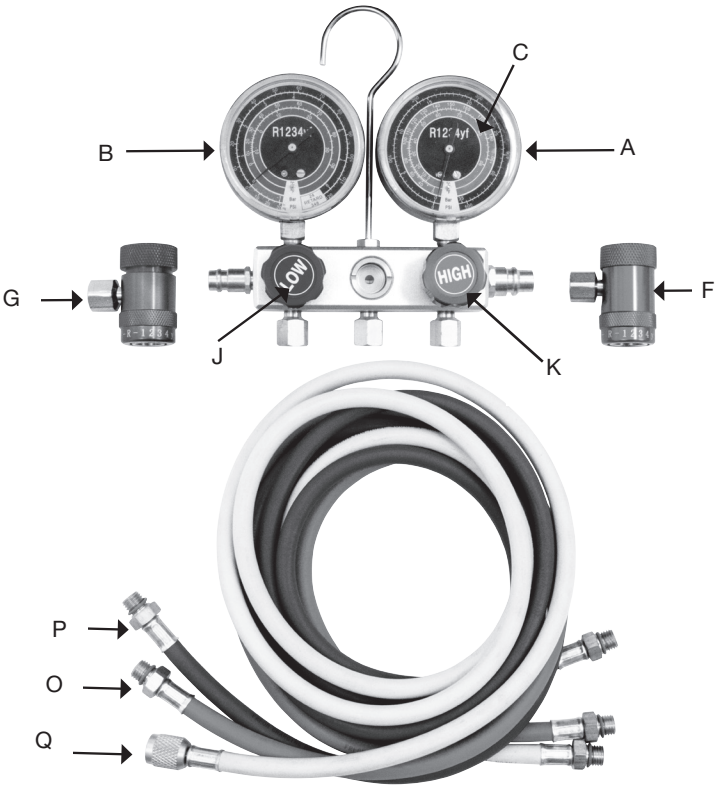

NOTE: Not all components of the A/C Manifold are replacement items, but are illustrated as a convenient reference for location and position in the assembly sequence.

OEMTOOLS® ONE YEAR WARRANTY

If for up to one year from the date of purchase of this OEMTOOLS product you find any defect in material or workmanship, through normal usage, return it to the place of purchase, or to OEMTOOLS for repair or replacement at our discretion. In order to obtain this service send your tool and proof of purchase, transportation pre-paid, to OEMTOOLS Q.A. Dept, 3580 E. Raines Road #3, Memphis, TN 38118. We will not be responsible for lost or damaged goods during transportation, please insure your package. If our inspection verifies the defect, we will either repair or replace the product at our election, or we may elect to refund the purchase price if we cannot readily and quickly provide you with a replacement. We will return repaired products at our expense, but if we determine there is no defect, or that the defect resulted from causes not within the scope of our warranty, then you must bear the cost of returning the product.

OEMTOOLS does not provide warranty for products labeled other than OEM or OEMTOOLS . OEMTOOLS will not provide any warranty for products subjected to abnormal use. Abnormal use includes, but is not limited to, abuse, accident, alteration, neglect, and unauthorized or unreasonable use or repairs. This warranty does not cover bits, blades, files, batteries, or calibration. We recommend that you maintain your tools and sharpen or replace blades, bits, files, and batteries as necessary. OEMTOOLS reserves the right to makes any changes in construction or design at any time without any obligation in incorporating such changes to tools or equipment previously sold.

OEMTOOLS makes every effort to assure that its products meet high quality and durability standards, and warrants to the original purchaser that this product is free from defects in materials and workmanship for the period of one year from the date of purchase. This warranty does not apply to damage due directly or indirectly to misuse, abuse, negligence or accidents, repairs or alterations outside our facilities, criminal activity, improper installation, normal wear and tear or to lack of maintenance.

We shall in no event be liable for death, injuries to persons or property, or for incidental, contingent, special or consequential damages arising from the use of our product. Some states do not allow the exclusion or limitation of incidental or consequential damages, so the above limitation of exclusion may not apply to you. THIS WARRANTY IS EXPRESSLY IN LIEU OF ALL OTHER WARRANTIES, EXPRESS OR IMPLIED, INCLUDING THE WARRANTIES OF MERCHANTABILITY AND FITNESS. This warranty gives you specific legal rights, and you may also have other rights, which vary from state to state.

CONTACT US

3580 E. Raines Road, Suite 3, Memphis, TN 38118
Tel: 1-866-458-2472
www.oem-tools.com

2015 ©OEMTOOLS