Please read and save these instructions. Read through this owner's manual carefully before using product. Protect yourself and others by observing all safety information, warnings, and cautions. Failure to comply with instructions could result in personal injury and/or damage to product or property. Please retain instructions for future reference.

HEAVY-DUTY ROLLING WORKBENCH AND SEAT CREEPER

FOR CUSTOMER SERVICE

Technical Question?

CALL 1-866-458-2472

customerservice@oem-tools.com

UNPACKING

After unpacking unit, inspect carefully for any damage that may have occurred during transit. Check for loose, missing, or damaged parts. If any damage is observed, a shipping damage claim must be filed with carrier. DO NOT use the OEMTOOLS® Heavy-Duty Rolling Workbench and Seat Creeper if broken, bent, cracked or damaged parts (including labels) are noted. Any Seat Creeper that appears damaged in any way, operates abnormally, or is missing parts should be removed from service immediately. If you suspect that the Seat Creeper was subjected to shock load (a load that was dropped suddenly, unexpectedly, etc.), immediately discontinue use until it has been checked by a factory authorized service center.

⚠ WARNING

The following safety information is provided as a guideline to help you operate your Seat Creeper under the safest possible conditions. Any tool or piece of equipment can be potentially dangerous to use when safety or safe handling instructions are not known or not followed. The following safety instructions are to provide the user with the information necessary for safe use and operation. Please read and retain these instructions for the continued safe use of your Seat Creeper. Failure to follow instructions listed below may result in serious injury. In addition, make sure that anyone who uses the equipment understands and follows these safety instructions as well.

Explanation of Safety Signal Words

⚠WARNING: Indicates a potentially hazardous situation which, if not avoided, could result in death or serious injury.

⚠CAUTION: Indicates a potentially hazardous situation which, if not avoided, may result in minor or moderate injury.

CAUTION: Used without the safety alert symbol indicates a potentially hazardous situation which, if not avoided, may result in property damage.

NOTES: Provide clarity and helpful information.

Thank you very much for choosing an OEMTOOLS® Product!

For future reference, please register your new tool at www.oem-tools.com and complete the owner's record below:

Model: _____ **Purchase Date**: _____

Save the receipt, warranty and these instructions. It is important that you read the entire manual to become familiar with this product before you begin using it. This product is designed for certain applications only. OEMTOOLS® cannot be responsible for issues arising from modification. We strongly recommend that this product is not modified and/or used for any application other than that for which it was designed. If you have any questions relative to a particular application, DO NOT use the product until you have first contacted customer service to determine if it can or should be performed on the product.

⚠WARNING: Pursuant to California Proposition 65, this product contains chemicals known to the state of California to cause cancer and birth defects or other reproductive harm. Wash hands after handling.

2020 OEMTOOLS®

HEAVY-DUTY ROLLING WORKBENCH AND SEAT CREEPER

IMPORTANT INSTRUCTIONS AND SAFETY RULES

1. Know your product. Read this manual carefully. Learn the product's applications and limitations, as well as potential hazards specific to it. The use of this product is simple and straightforward if you follow the instructions. When operating this product, use common sense and only use this product for its intended purpose.
2. Maintain labels and nameplates on this product. These carry important information. If unreadable or missing, contact OEMTOOLS® for a replacement.
3. Maintain this product with care. Keep it dry and clean – and free from brake fluid, oil, and grease (if applicable).
4. Check for damage. Check your product regularly. If part of the product is damaged, it should be carefully inspected to make sure that it can perform its intended function correctly. If in doubt, the part should be repaired. Refer all servicing to a qualified technician. Consult your dealer for advice.
5. Check for misalignment or binding of moving parts, breakage of parts, and any other condition that may affect the product's operation.
6. DO NOT use a damaged product. Tag damaged products "DO NOT USE" until repaired. If damaged, have the product serviced before using. Many accidents are caused by poorly maintained products.
7. Service must be performed only by qualified repair personnel. Service or maintenance performed by unqualified personnel could create a risk of injury.
8. When servicing a product, use only identical replacement parts. Use of unauthorized parts or failure to follow maintenance instructions could create a risk of injury.
9. Use only accessories that are recommended by the manufacturer for your model. Accessories that may be suitable for one product may become hazardous when used on another product.
10. Keep work area clean and well lit. Cluttered or dark work areas invite accidents.
11. Maintain a safe working environment. Keep the work area well lit. Make sure there is adequate surrounding workspace. Keep the work area free of obstructions, grease, oil, trash, and other debris. DO NOT use this product in a damp or wet location.
12. Keep children away from the work area. Never let a child handle this product without strict adult supervision.
13. Store this product out of the reach of children and untrained persons. This product may be dangerous in the hands of untrained users.
14. DO NOT operate this product if under the influence of alcohol or drugs. Read warning labels on prescriptions to determine if your judgment or reflexes are impaired while taking drugs. If there is any doubt, DO NOT attempt to operate.
15. Use safety equipment. Eye protection should be worn at all times when operating this product. Use ANSI approved safety glasses. Everyday eyeglasses are NOT safety glasses. Dust mask, non-skid safety shoes, hard hat or hearing protection should be used in appropriate conditions.
16. Wear proper apparel. Loose clothing, gloves, neck-ties, rings, bracelets or other jewelry may present a potential hazard when operating this product. Keep all apparel clear of the product.
17. DO NOT overreach. Keep proper footing and balance at all times when operating this product.
18. Keep away from flammables. DO NOT attempt to operate this product near flammable materials or combustibles. Failure to comply may cause serious injury or death.
19. Avoid accidental fire and/or explosion. DO NOT smoke near engine fuel and battery components.
20. We believe the information contained herein to be reliable. However, general technical information is given by us without charge and the user shall employ such information at their own discretion and risk. We assume no responsibility for results or damages incurred from the use of such information in whole or in part. Always refer to specific instructions and technical information supplied by vehicle manufacturer.
21. The manufacturer declines any and all responsibility for property damage or injury if said damage is the result of unskillful handling by the operator or of failure to observe the basic safety rules set forth in the instruction manual.
22. The warnings, precautions, and instructions discussed in this manual cannot cover all possible conditions and situations that may occur. The operator must understand that common sense and caution are factors which cannot be built into this product, but must be supplied by the operator.

PRODUCT DESCRIPTION

The Heavy-Duty Rolling Workbench and Seat Creeper is designed to provide a seat at work height. This seat is designed with removable drawers for easy storage and transport of parts and tools.

PRODUCT SPECIFICATIONS

Weight Capacity	300 Lb. (136 kg)
Total Product Weight	14.5 Lb.
Caster Material	Rubber
Caster Size	4"
Caster Type	(2) Swivel, (2) Locking & Swivel

CONTENTS

(1) Seat Creeper Frame, (2) Wheelbase Assemblies, (2) Side Removable Trays, (1) Center Removable Tray, (4) Bolts, (8) Washers, (4) Fasteners

HEAVY-DUTY ROLLING WORKBENCH AND SEAT CREEPER

SPECIFIC SAFETY INSTRUCTIONS AND WARNINGS

⚠WARNING: ALWAYS read and understand the instruction manual prior to use.

⚠WARNING: This Creeper Seat is specifically designed to be used as a mobile workshop/garage/shed seat ONLY and is not designed for any other purpose.

⚠WARNING: NEVER stand on, lie on or operate the Workshop Creeper seat at any speed, on rough/exposed uneven surfaces.

⚠WARNING: DO NOT allow children to play on, stand upon or climb on seat.

⚠WARNING: Uneven weight distribution may cause the seat to tip over.

⚠WARNING: DO NOT step or lean on the drawers.

⚠WARNING: Be mindful of sharp edges/welds while assembling and operating this product.

⚠WARNING: DO NOT exceed weight capacity (see product specifications). This may lead to product failure and personal injury.

ASSEMBLY INSTRUCTIONS

1. Remove all parts from packaging; reference the manual to ensure all parts are provided.
2. Set the Seat Creeper Frame (A) upside down, so that the seat is on the ground. Ensure you are working on a level and clean surface.
3. Place Wheelbase Assembly (B) against the bottom of the Frame (A) base support so that the wheels are facing upward and outward (extending the width of the wheelbase). Align the bolt holes on the Wheelbase Assembly (B) with the holes on the Frame (A) base support.
4. Thread a Washer (E) over a provided Bolt (D). Thread the Bolt (D) through the Frame (A) base support and Wheelbase Assembly (B), in that order. Thread a second Washer (E) over the Bolt (D) and then thread and hand tighten the Fastener (F).
5. Repeat for both sides of the Frame (A).
6. Repeat steps 3-5 for the second Wheelbase Assembly (B).
7. Place and snap the Side Removable Trays (C) on each side.

PRODUCT LAYOUT

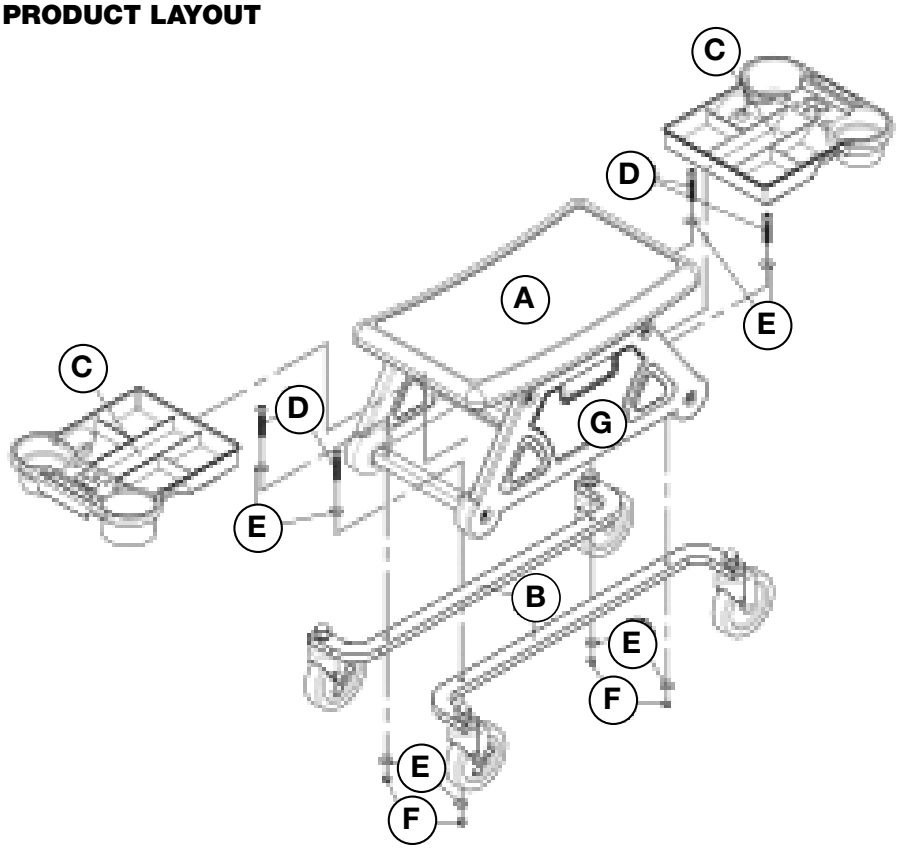

PARTS LIST

Figure	Description	Qty.
A	Seat Creeper Frame	1
B	Wheelbase Assembly	2
C	Side Removable Trays	2
D	Bolt	4
E	Washer	8
F	Fastener	4
G	Center Drawer	1

2020 OEMTOOLS®

HEAVY-DUTY ROLLING WORKBENCH AND SEAT CREEPER

OEMTOOLS® ONE YEAR WARRANTY

For up to one year from the date of purchase of this OEMTOOLS® product, if you find any defect in material or workmanship (through normal usage), return it to the place of purchase or to OEMTOOLS® for repair or replacement at our discretion. In order to obtain this service, send the product and proof of purchase (transportation pre-paid) to:

OEMTOOLS® Q.A. Dept, 3580 E. Raines Road #3, Memphis, TN 38118.

We will not be responsible for lost or damaged goods during transportation; please insure your package. If our inspection verifies the defect, we will either repair or replace the product, or we may elect to refund the purchase price if we cannot readily and quickly provide you with a replacement. We will return repaired products at our expense, but if we determine there is no defect, or that the defect resulted from causes not within the scope of our warranty, then you must bear the cost of returning the product.

OEMTOOLS® does not provide warranty for products labeled other than OEM® or OEMTOOLS®. OEMTOOLS® will not provide any warranty for products subjected to abnormal use. Abnormal use includes (but is not limited to) abuse, accident, alteration, neglect, and unauthorized or unreasonable use or repairs. This warranty does not cover bits, blades, files, batteries, or calibration. We recommend that you maintain your tools and sharpen or replace blades, bits, files, and batteries as necessary. OEMTOOLS® reserves the right to make any changes in construction or design at any time without any obligation in incorporating such changes to tools or equipment previously sold.

OEMTOOLS® makes every effort to ensure that its products meet high quality and durability standards, and warrants to the original purchaser that this product is free from defects in materials and workmanship for the period of one year from the date of purchase. This warranty does not apply to damage due directly or indirectly to misuse, abuse, negligence or accidents, repairs or alterations outside our facilities, criminal activity, improper installation, normal wear and tear, or to lack of maintenance.

We shall in no event be liable for death, injuries to persons or property, or for incidental, contingent, special or consequential damages arising from the use of our product. Some states do not allow the exclusion or limitation of incidental or consequential damages, so the above limitation of exclusion may not apply to you. THIS WARRANTY IS EXPRESSLY IN LIEU OF ALL OTHER WARRANTIES, EXPRESS OR IMPLIED, INCLUDING THE WARRANTIES OF MERCHANTABILITY AND FITNESS. This warranty gives you specific legal rights, and you may also have other rights, which vary from state to state.

Don’t forget to register your new OEMTOOLS® product at www.oem-tools.com.

CONTACT US

3580 E. Raines Road, Suite 3, Memphis, TN 38118
Tel: 1-866-458-2472
www.oem-tools.com

2020 OEMTOOLS®