Please read and save these instructions. Read through this owner's manual carefully before using product. Protect yourself and others by observing all safety information, warnings, and cautions. Failure to comply with instructions could result in personal injury and/or damage to product or property. Please retain instructions for future reference.

2 TON OFF-ROAD JACK

FOR CUSTOMER SERVICE

Technical Question?

CALL 1-866-458-2472

customerservice@oem-tools.com

UNPACKING

After unpacking the unit, inspect carefully for any damage that may have occurred during transit. Check for loose, missing, or damaged parts. If any damage is observed, a shipping damage claim must be filed with the carrier. DO NOT use the OEMTOOLS® 29004 2 Ton Off-Road Jack if broken, bent, cracked or damaged parts (including labels) are noted. Any Off-Road Jack that appears damaged in any way, operates abnormally or is missing parts should be removed from service immediately. If you suspect that the Off-Road Jack was subjected to shock load (a load that was dropped suddenly, unexpectedly, etc.) Immediately discontinue use until it has been checked by a factory authorized service center.

⚠ WARNING

The following safety information is provided as a guideline to help you operate your Off-Road Jack under the safest possible conditions. Any tool or piece of equipment can be potentially dangerous to use when safety or safe handling instructions are not known or not followed. The following safety instructions are to provide the user with the information necessary for safe use and operation. Please read and retain these instructions for the continued safe use of your Off-Road Jack. Failure to follow instructions listed below may result in serious injury. In addition, make sure that anyone who uses the equipment understands and follows these safety instructions as well.

Explanation of Safety Signal Words

⚠**WARNING:** Indicates a potentially hazardous situation which, if not avoided, could result in death or serious injury.

⚠**CAUTION:** Indicates a potentially hazardous situation which, if not avoided, may result in minor or moderate injury.

CAUTION: Used without the safety alert symbol indicates a potentially hazardous situation which, if not avoided, may result in property damage.

NOTES: Provide clarity and helpful information.

Thank you very much for choosing an OEMTOOLS® Product!

For future reference, please register your new tool at www.oem-tools.com and complete the owner's record below:

Model: _____ **Purchase Date**: _____

Save the receipt, warranty and these instructions. It is important that you read the entire manual to become familiar with this product before you begin using it. This product is designed for certain applications only. OEMTOOLS® cannot be responsible for issues arising from modification. We strongly recommend that this product is not modified and/or used for any application other than that for which it was designed. If you have any questions relative to a particular application, DO NOT use the product until you have first contacted customer service to determine if it can or should be performed on the product.

⚠**WARNING:** This product can expose you to chemicals which are known to the State of California to cause cancer and birth defects or other reproductive harm. For more information go to www.P65Warnings.ca.gov.

2024 OEMTOOLS®

2 TON OFF-ROAD JACK

IMPORTANT INSTRUCTIONS AND SAFETY RULES

1. Know your product. Read this manual carefully. Learn the product's applications and limitations, as well as potential hazards specific to it. The use of this product is simple and straightforward if you follow the instructions. When operating this product, use common sense and only use this product for its intended purpose.
2. Maintain labels and nameplates on this product. These carry important information. If unreadable or missing, contact OEMTOOLS® for a replacement.
3. Maintain this product with care. Keep it dry and clean – and free from brake fluid, oil, and grease (if applicable).
4. Check for damage. Check your product regularly. If part of the product is damaged, it should be carefully inspected to make sure that it can perform its intended function correctly. If in doubt, the part should be repaired. Refer all servicing to a qualified technician. Consult your dealer for advice.
5. Check for misalignment or binding of moving parts, breakage of parts, and any other condition that may affect the product's operation.
6. DO NOT use a damaged product. Tag damaged products "DO NOT USE" until repaired. If damaged, have the product serviced before using. Many accidents are caused by poorly maintained products.
7. Service must be performed only by qualified repair personnel. Service or maintenance performed by unqualified personnel could create a risk of injury.
8. When servicing a product, use only identical replacement parts. Use of unauthorized parts or failure to follow maintenance instructions could create a risk of injury.
9. Use only accessories that are recommended by the manufacturer for your model. Accessories that may be suitable for one product may become hazardous when used on another product.
10. Keep work area clean and well lit. Cluttered or dark work areas invite accidents.
11. Maintain a safe working environment. Keep the work area well lit. Make sure there is adequate surrounding workspace. Keep the work area free of obstructions, grease, oil, trash, and other debris. DO NOT use this product in a damp or wet location.
12. Keep children away from the work area. Never let a child handle this product without strict adult supervision.
13. Store this product out of the reach of children and untrained persons. This product may be dangerous in the hands of untrained users.
14. DO NOT operate this product if under the influence of alcohol or drugs. Read warning labels on prescriptions to determine if your judgment or reflexes are impaired while taking drugs. If there is any doubt, DO NOT attempt to operate.
15. Use safety equipment. Eye protection should be worn at all times when operating this product. Use ANSI approved safety glasses. Everyday eyeglasses are NOT safety glasses. Dust mask, non-skid safety shoes, hard hat or hearing protection should be used in appropriate conditions.
16. Wear proper apparel. Loose clothing, gloves, neck-ties, rings, bracelets or other jewelry may present a potential hazard when operating this product. Keep all apparel clear of the product.
17. DO NOT overreach. Keep proper footing and balance at all times when operating this product.
18. Keep away from flammables. DO NOT attempt to operate this product near flammable materials or combustibles. Failure to comply may cause serious injury or death.
19. Avoid accidental fire and/or explosion. DO NOT smoke near engine fuel and battery components.
20. We believe the information contained herein to be reliable. However, general technical information is given by us without charge and the user shall employ such information at their own discretion and risk. We assume no responsibility for results or damages incurred from the use of such information in whole or in part. Always refer to specific instructions and technical information supplied by vehicle manufacturer.
21. The manufacturer declines any and all responsibility for property damage or injury if said damage is the result of unskillful handling by the operator or of failure to observe the basic safety rules set forth in the instruction manual.
22. The warnings, precautions, and instructions discussed in this manual cannot cover all possible conditions and situations that may occur. The operator must understand that common sense and caution are factors which cannot be built into this product, but must be supplied by the operator.

PRODUCT DESCRIPTION

The OEMTOOLS® 29004 2 Ton Off-Road Jack is for lifting SUVs, ATVs and UTVs in off road conditions but not supporting a load. It is necessary to support the load with appropriate means immediately after lifting.

PRODUCT SPECIFICATIONS

Capacity			2 Tons
Min. Height	Without Extension		6-1/8"
	With Height Extension	1st Step	11-1/4"
		2nd Step	12-3/8"
Max. Height	Without Extension		18-5/16"
	With Height Extension	1st Step	23-7/16"
		2nd Step	24-5/8"
Weight			59.5 Lb.

2 TON OFF-ROAD JACK

SPECIFIC SAFETY INSTRUCTIONS AND WARNINGS

1. Never use the Floor Jack for any purpose other than the information in this manual.
2. Verify that the product and application are compatible; if in doubt call OEMTOOLS® at 1-866-458-2472.
3. Before using this product, read the operator's manual completely and familiarize yourself thoroughly with the product and its components, and recognize the hazards associated with its use.
4. Wear appropriate safety gear, including heavy-duty work gloves and ANSI-approved safety goggles during use.
5. Ensure that the jack rolls freely. Raise and lower the unloaded jack throughout the lifting range before putting into service to ensure the pump operates smoothly. Replace worn or damaged parts.
6. DO NOT exceed the weight capacity of the jack. Make sure weight is evenly distributed. Be aware of dynamic loading! Sudden load movement may briefly create excess load causing product failure. Exceeding the maximum capacity for this product is dangerous and can lead to serious injury or property damage.
7. Always evaluate your task before using this jack. This jack is designed to lift but not support your vehicle. Use only as intended.
8. Never work under a vehicle only supported by a jack.
9. It is recommended that each unlifted tire be chocked in both directions.
10. Use only on a surface capable of supporting the load.
11. Lift only on areas of the vehicle as specified by the vehicle manufacturer.
12. DO NOT attempt to move or dolly a vehicle with a jack.
13. DO NOT lift or carry the jack by the handle. The handle may become disconnected resulting in injury or property damage.
14. Before each use, inspect the general condition of the jack. Check for oil leaks, jack operation, loose components, free rotation and pivoting of saddle adjustment components. If a problem occurs, have the problem corrected before further use.

⚠WARNING: DO NOT use a damaged or malfunctioning jack.

15. If in doubt about the safety of your project, we advise you to have the work done by a professional familiar with applicable safety practices.

ASSEMBLY INSTRUCTIONS

A. SETUP

1. Install the extension bracket on either the right or left side of the jack. Remove the bolts and washers from the jack's frame as shown below (Fig. 1). Align the bracket bolt holes with the holes on the side of the jack frame and reinstall bolts and washers.

Fig. 1

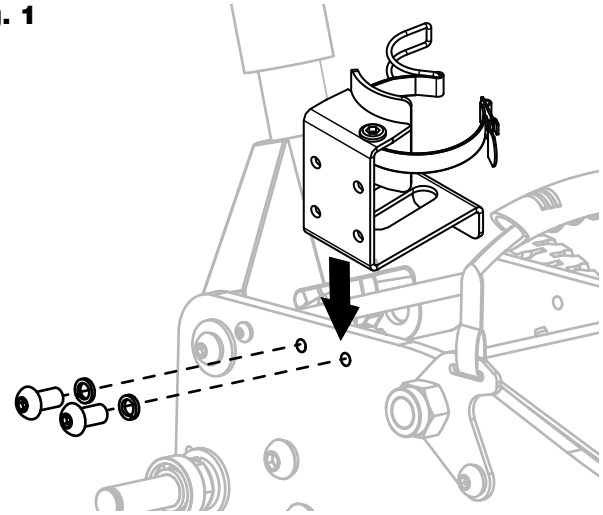

2. Assemble the two-piece handle.
3. Insert the handle into the handle socket.
4. Secure the handle to the handle fork by tightening the bolt.

B. INSTALLING SADDLE EXTENSION

1. To install the Saddle Extension, adjust Saddle so that the two holes in the Saddle and Saddle Pad align with Saddle Base.
2. Loosen Saddle Extension Set Screw and remove Extension from its storage place. See Fig. 2.

Fig. 2

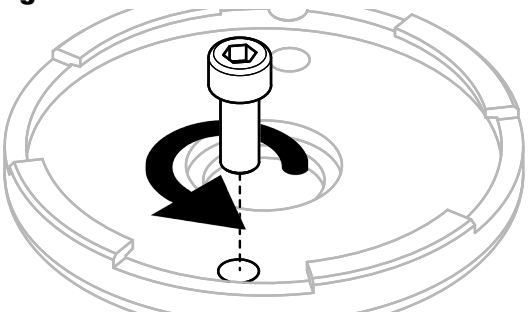

2024 OEMTOOLS®

2 TON OFF-ROAD JACK

3. Place Saddle Extension onto Saddle and secure with two Saddle Extension Set Screws. See Fig. 3.

Fig. 3

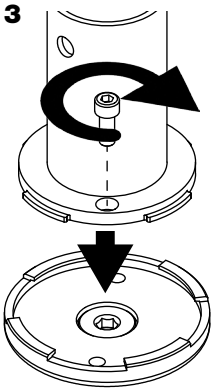

4. Use Wrench to tighten two screws.
5. In order to activate the pump handle, disengage the handle locking lever and proceed to pump to make sure there is no air trapped in the jack's hydraulic system due to shipping and handling.

C. BLEEDING THE JACK OF AIR

1. Open the release valve by turning the handle two full turns counterclockwise.
2. Quickly pump the handle a minimum ten full strokes.
3. Close the release valve by turning the handle clockwise.
4. Several attempts may be required to fully remove all air from the jack.

OPERATION INSTRUCTIONS

A. LIFTING

IMPORTANT: Determine the required work height for the vehicle. If the jack cannot reach this height, remove the saddle extension from the jack's chassis and attach it to the stock saddle. For extra height, place the extension in position 2, ensuring it clears the vehicle and aligns with the designated lift points when the jack is used.

1. Follow the vehicle manufacturer's recommended guidelines for lifting. Engage the emergency brake and chock each unlifted wheel in both directions to prevent inadvertent vehicle movement.
2. Close the release valve by turning the handle clockwise until resistance is felt. DO NOT over tighten.
3. Refer to the vehicle manufacturer owner's manual to locate approved lifting points on the vehicle. Center the jack saddle under lift point.
4. Pump handle to contact lift point. Check jack positioning under slight load to ensure that jack or load will not slip or move suddenly. To lift, continue pumping until the load reaches the desired height.
5. Transfer the load immediately to appropriately rated jack stands

B. LOWERING

⚠**WARNING:** Clear all tools and personnel before lowering load.

1. Raise load high enough to clear jack stands.
2. Remove jack stands.
3. Turn the handle counterclockwise to open the release valve.
4. The speed of descent is controlled by the amount the release valve is turned. Maintain control of the load at all times.

MAINTENANCE

Use only high-quality hydraulic jack oil. Avoid mixing different types of fluid and NEVER use brake fluid, turbine oil, transmission fluid, motor oil or glycerin. Improper fluid can cause premature failure of the jack and the potential for sudden and immediate loss of load.

A. LUBRICATION

A periodic coating of light lubricating oil to pivot points, axles and hinges will help to prevent rust and assure that wheels, casters and pump assemblies move freely.

B. CLEANING

Check the pump piston and ram for signs of rust or corrosion. Clean as needed and wipe with an oily cloth.

NOTE: DO NOT use sandpaper or abrasive material on ram and pump piston surfaces.

C. ADDING OIL

1. With the saddle fully lowered, set the jack in its upright, level position.
2. Remove the four screws on the tool tray.
3. Remove the screw on the reservoir.
4. Add oil until just below the edge of the oil filler plug hole. Reinstall the oil filler plug and put back the tool tray.

D. CHANGING THE OIL

NOTE: For best performance and longest life, replace the complete fluid supply at least once per year.

1. With the saddle fully lowered, remove the four screws on the tool tray.
2. Remove the screw on the reservoir.
3. Lay the jack on its side and drain the fluid into a suitable container.

NOTE: Dispose of hydraulic fluid in accordance with local environmental regulations.

4. Set the jack in a level position.
5. Fill it with 250 mL high quality hydraulic oil until just below the edge of the oil filler plug hole.
6. Reinstall the oil filler plug and put back the tool tray.

STORAGE

Always store jack in the fully lowered position with the handle in the upright position.

DISPOSAL

At the end of the useful life of the 2 Ton Off-Road Jack, dispose of the components according to all state, federal, and local regulations.

2024 OEMTOOLS®

OEMTOOLS®

2 TON OFF-ROAD JACK

NOTES:

2024 OEMTOOLS®

2 TON OFF-ROAD JACK

PRODUCT LAYOUT

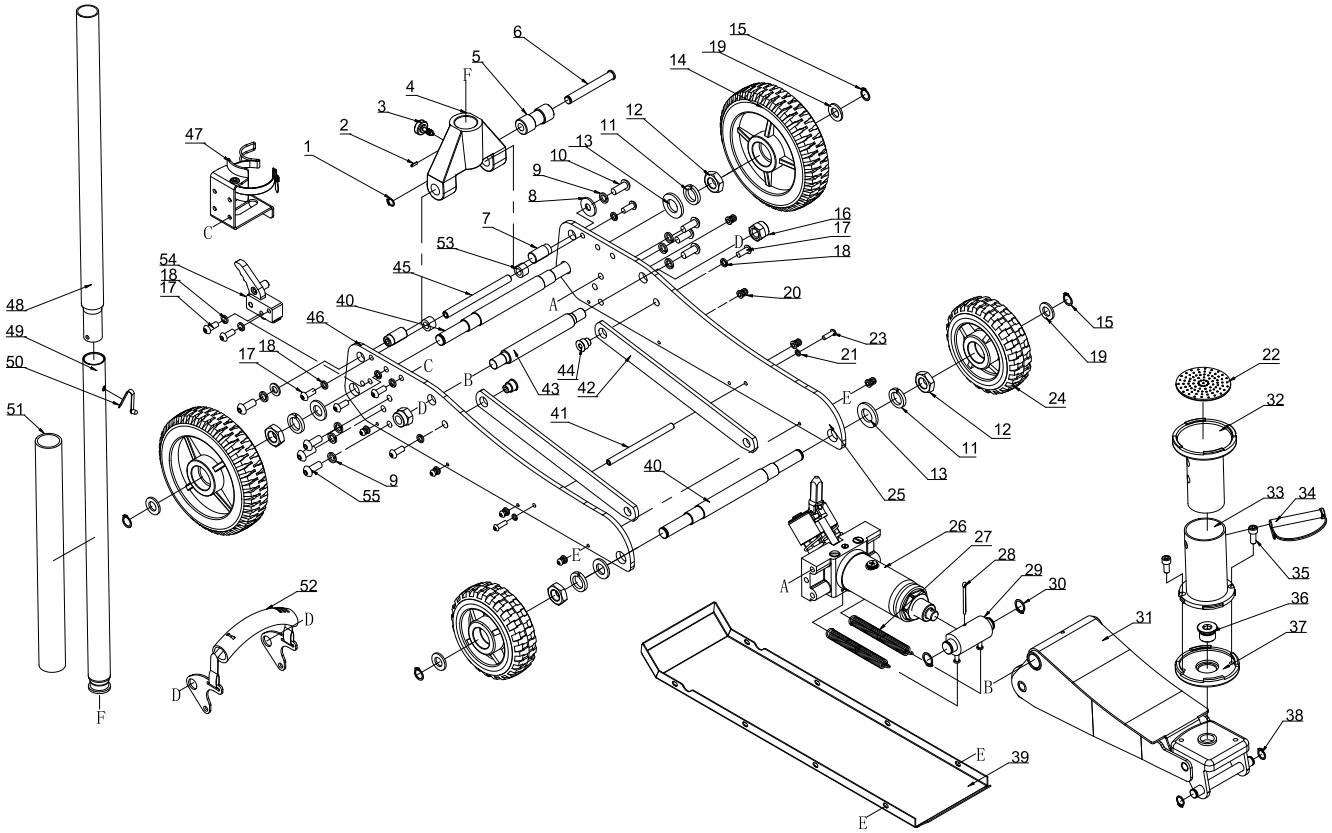

2024 OEMTOOLS®

2 TON OFF-ROAD JACK

PARTS LIST

Figure	Description	Qty.
1	Retaining Ring	1
2	Pin	1
3	Screw	1
4	Handle Base	1
5	Pump Core Wheel	1
6	Pin	1
7	Pin	2
8	Flat Washer	2
9	Lock Washer	8
10	Screw	2
11	Lock Washer	4
12	Nut	4
13	Flat Washer	4
14	8" Fixed Wheel	2
15	Retaining Ring	4
16	Nut	2
17	Screw	4
18	Lock Washer	8
19	Flat Washer	4
20	Screw	8
21	Lock Washer	2
22	Rubber Pad	1
23	Screw	2
24	6" Fixed Wheel	2
25	Adjustable Plate	2
26	Pump Assembly	1
27	Spring	2
28	Pin	1

Figure	Description	Qty.
29	Rod Assembly	1
30	Retaining Ring	2
31	Lifting Structure	1
32	Raised Head Inner Tube Assembly	1
33	Raised Head Outer Tube Assembly	1
34	Pin	1
35	Screw	2
36	Screw	1
37	Saddle	1
38	Retaining Ring	2
39	Frame Protection Plate	1
40	Axle	2
41	Connecting Rod	1
42	Adjustable Plate	2
43	Lifting Shaft	1
44	Nut	2
45	Limiting Rod	1
46	Flat Washer	4
47	Saddle Bracket Assembly	1
48	Upper Handle Assembly	1
49	Lower Handle Assembly	1
50	Pin	1
51	Handle Sleeve	1
52	Handle	1
53	Limiting Ring	2
54	Handle Limit Block Assembly	1
55	Screw	6

NOTE: Not all components are replacement items, but are illustrated as a convenient reference for location and position in the assembly sequence.

2024 OEMTOOLS®

2 TON OFF-ROAD JACK

WE STAND BEHIND OUR TOOLS. OEMTOOLS® 1 YEAR WARRANTY

If within 1 year from the date of purchase of this OEMTOOLS product, you find any defect in material or workmanship, through normal usage, return it to the place of purchase or to OEMTOOLS® for repair or replacement at our discretion. In order to obtain this service, send your tool and proof of purchase (transportation pre-paid) to:

OEMTOOLS® Q.A. Dept., 3580 E. Raines Road #3, Memphis, TN 38118.

We will not be responsible for lost or damaged goods during transportation; please insure your package. If our inspection verifies the defect, we will repair or replace the product, or we may elect to refund the purchase price if we cannot readily and quickly provide you with a replacement. We will return repaired products at our expense, but if we determine there is no defect, or that the defect resulted from causes not within the scope of our warranty, then you must bear the cost of returning the product.

OEMTOOLS® does not provide warranty for products labeled other than OEM® or OEMTOOLS®. OEMTOOLS® will not provide any warranty for products subjected to abnormal use. Abnormal use includes (but is not limited to) abuse, accident, alteration, neglect, and unauthorized or unreasonable use or repairs. This warranty does not cover bits, blades, files, batteries, or calibration. We recommend that you maintain your tools and sharpen or replace blades, bits, files, and batteries as necessary. OEMTOOLS® reserves the right to make any changes in construction or design at any time without any obligation in incorporating such changes to tools or equipment previously sold.

OEMTOOLS® makes every effort to ensure that its products meet high quality and durability standards, and warrants to the original purchaser that this product is free from defects in materials and workmanship. This warranty does not apply to damage due directly or indirectly to misuse, abuse, negligence or accidents, repairs or alterations outside our facilities, criminal activity, improper installation, normal wear and tear, or to lack of maintenance.

OEMTOOLS® is not responsible for damaged shipments or shortages resulting from carrier mishandling. Notify your carrier's office immediately to file a claim. Keep damaged goods and containers for inspection until advised by the carrier as to disposal.

We shall in no event be liable for death, injuries to persons or property, or for incidental, contingent, special or consequential damages arising from the use of our product. Some states do not allow the exclusion or limitation of incidental or consequential damages, so the above limitation of exclusion may not apply to you. THIS WARRANTY IS EXPRESSLY IN LIEU OF ALL OTHER WARRANTIES, EXPRESS OR IMPLIED, INCLUDING THE WARRANTIES OF MERCHANTABILITY AND FITNESS. This warranty gives you specific legal rights, and you may also have other rights, which vary from state to state.

Please contact us at customerservice@oem-tools.com or call us at 901-370-1101 for additional information or questions.

Thank you for your purchase.

CONTACT US

3580 E. Raines Road, Suite 3, Memphis, TN 38118
Tel: 1-866-458-2472
www.oem-tools.com

2024 OEMTOOLS®